RF-BB Diagram

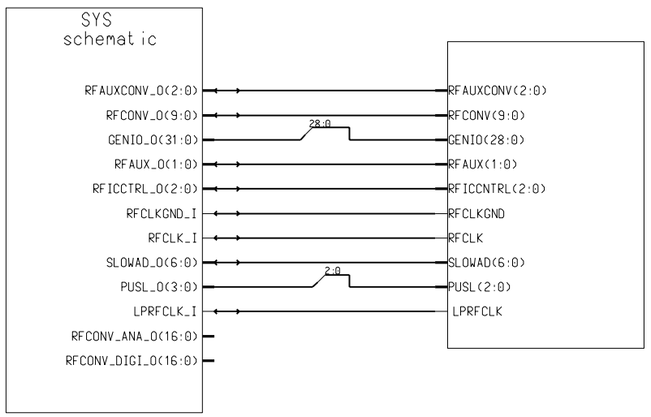

"GROUND HOLES FOR MECHANICS"

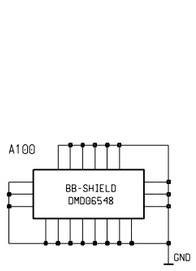

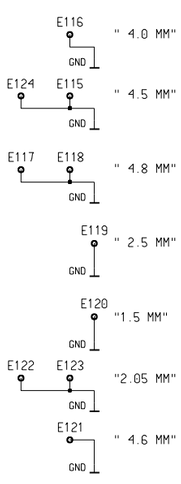

©Nokia Corporation Confidential

Circuit Diagram of RF Block

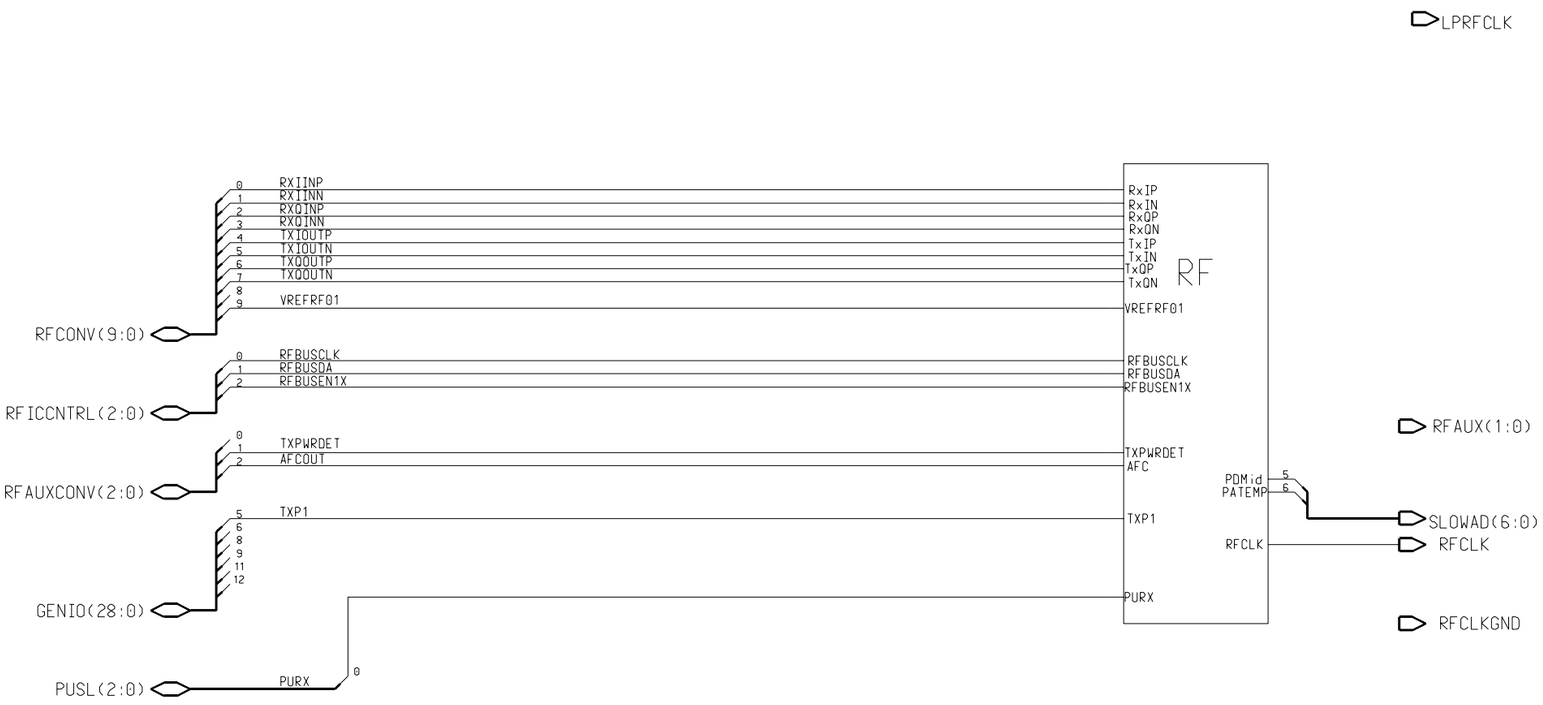

RF Module

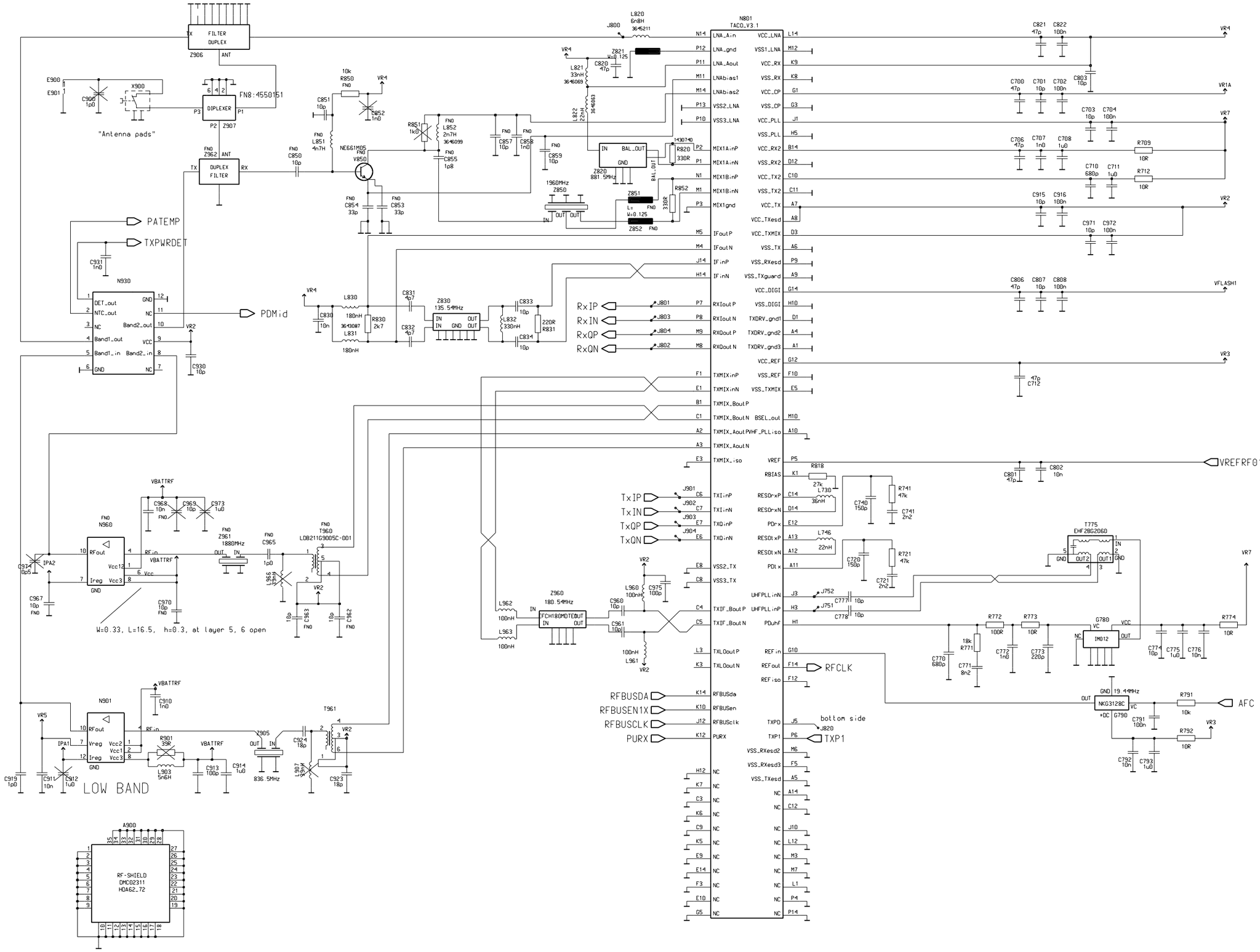
N801
TACO_V3.1
FILTER
DUPLEX
DIPLEXER
DUPLEX
FILTER
"Antenna pads"
PATEMP
TXPWRDET
PDMid
N930
RxIP
RxIN
RxQP
RxQN
TxIP
TxIN
TxQP
TxQN
RFCLK
RFBUSDA
RFBUSEN1X
RFBUSCLK
PURX
bottom side
TXP1
VREFRF01
AFC
N960
N901
LOW BAND
W=0.33, L=16.5, h=0.3, at layer 5, 6 open
RF-SHIELD
DMC02311
HDA62_72

DCT4 Common Baseband (Top-level)

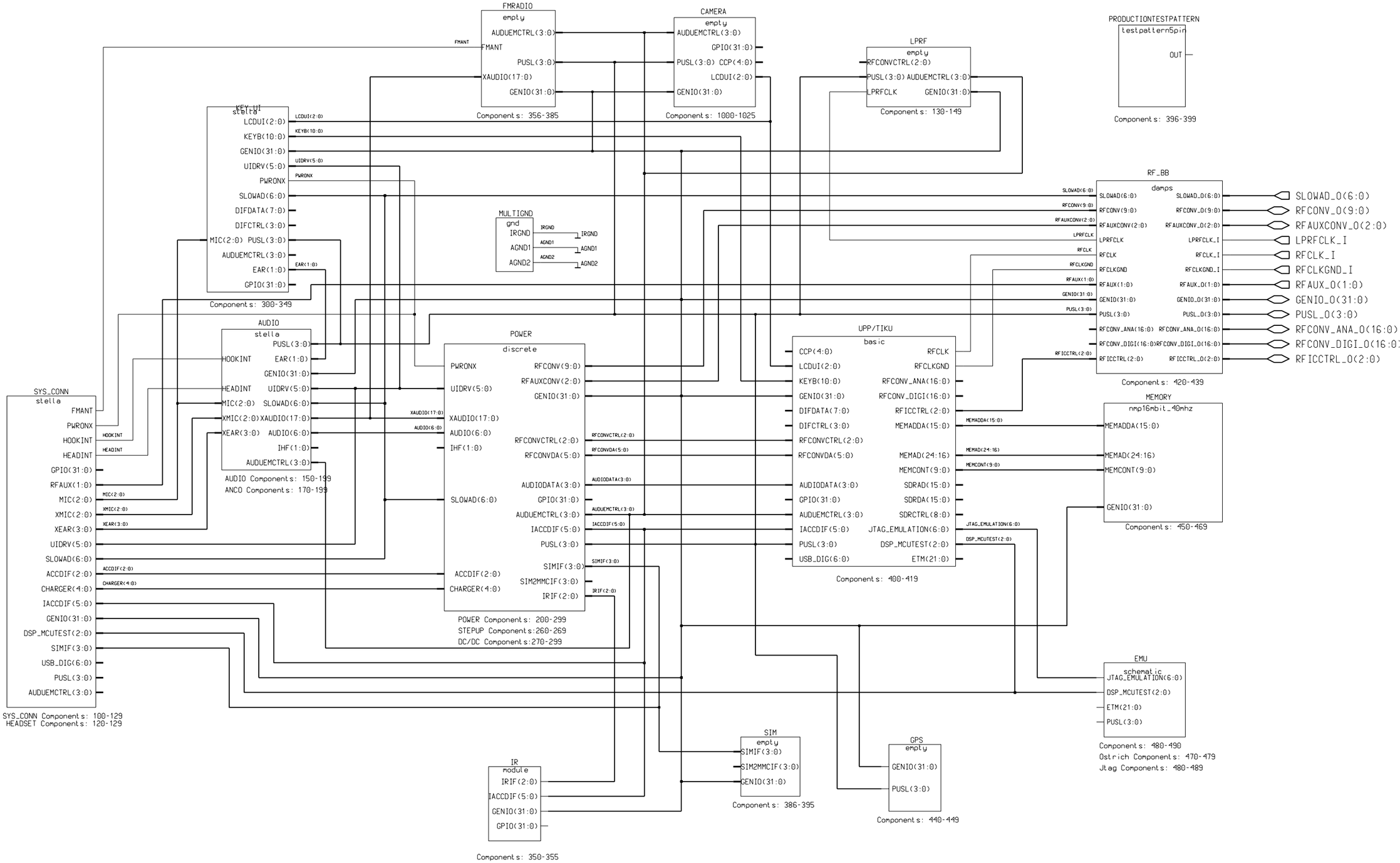

Flash Memory (32-bit)

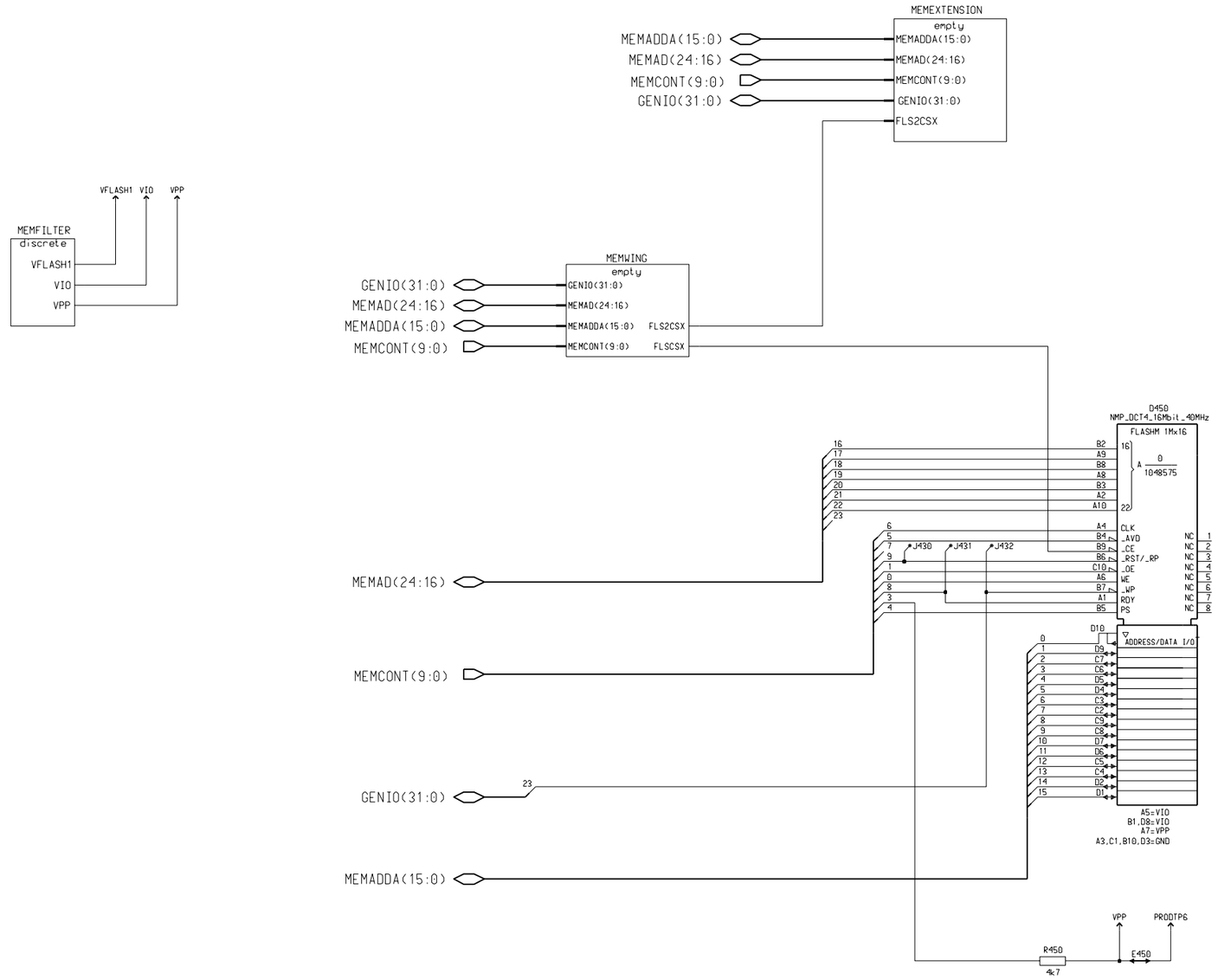

Sys/Sys Connector

AUDUEMCTRL(3:0)
PUSL(3:0)
GENIO(31:0)
USB_DIG(6:0)
SIMIF(3:0)
DSP_MCUTEST(2:0)
IACCDIF(5:0)
RFAUX(1:0)
PWRONX
UIDRV(5:0)
FMANT
GPIO(31:0)

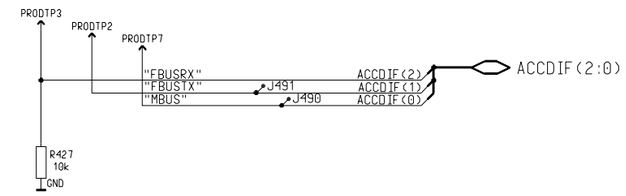

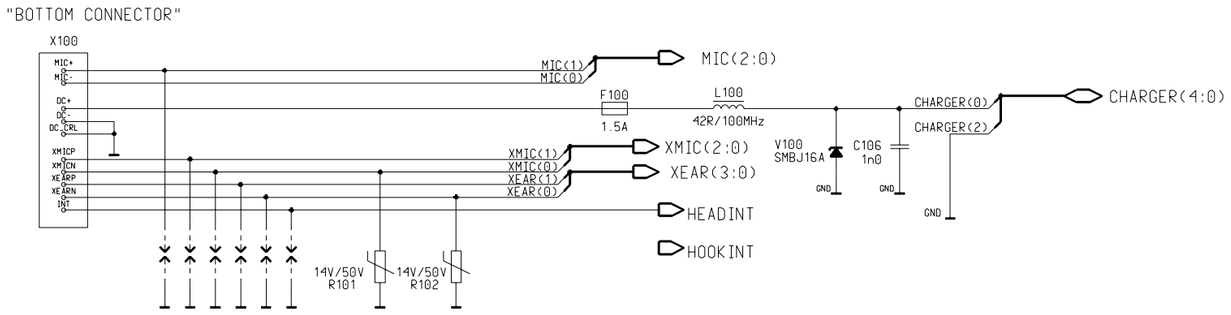

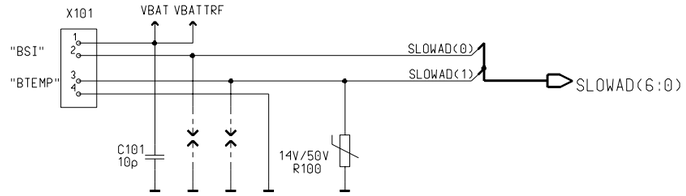

Sys Audio

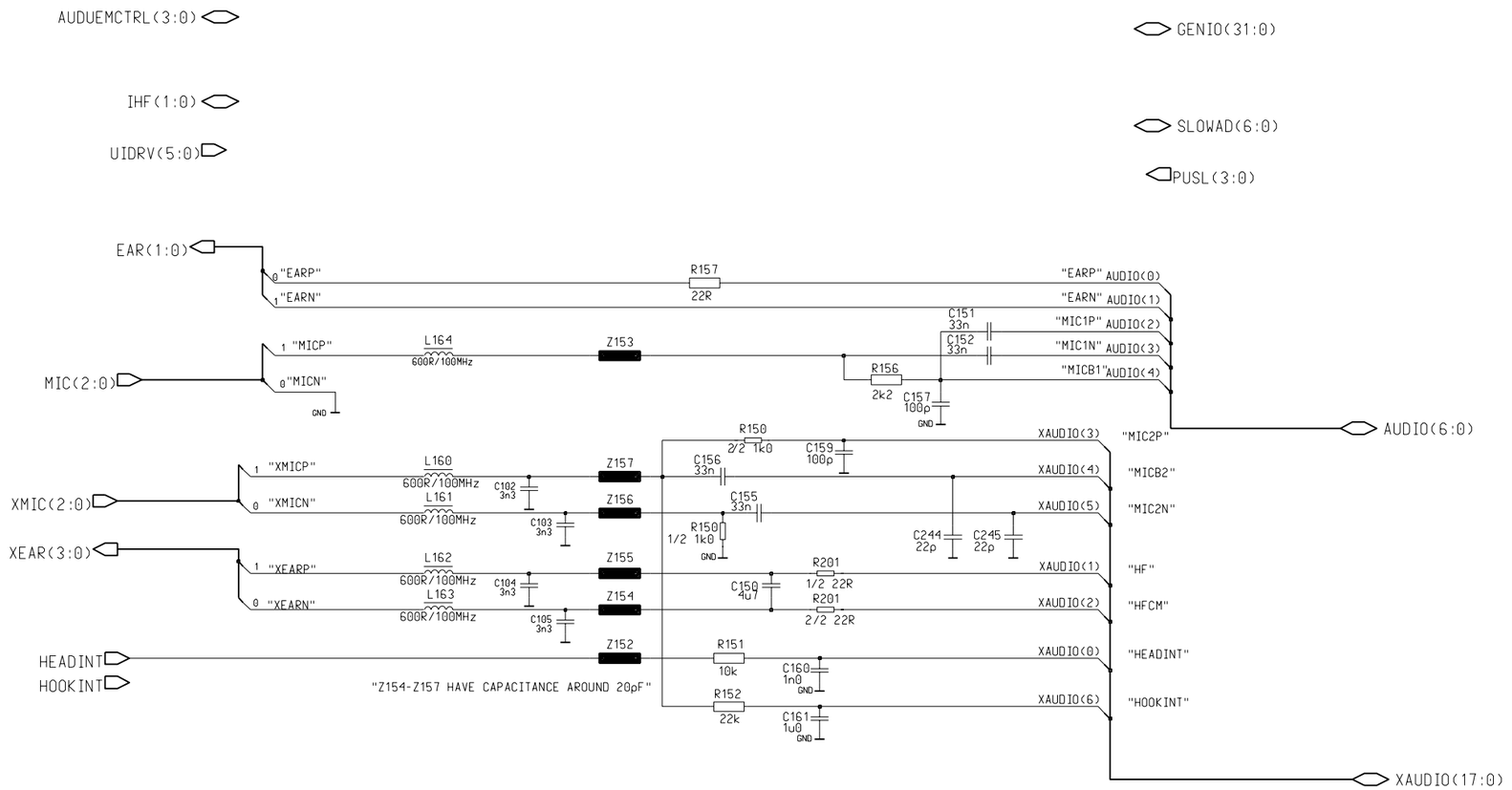
AUDUEMCTRL(3:0)
IHF(1:0)
UIDRV(5:0)
GENIO(31:0)
SLOWAD(6:0)
PUSL(3:0)
EAR(1:0)
0 "EARP"
1 "EARN"
R157
22R
"EARP" AUDIO(0)
"EARN" AUDIO(1)
"MIC1P" AUDIO(2)
"MIC1N" AUDIO(3)
"MICB1" AUDIO(4)
C151 33n
C152 33n
MIC(2:0)
1 "MICP"
0 "MICN"
L164 600R/100MHz
Z153
R156 2k2
C157 100p
GND
AUDIO(6:0)
XMIC(2:0)
1 "XMICP"
0 "XMICN"
L160 600R/100MHz
L161 600R/100MHz
C102 3n3
C103 3n3
Z157
Z156
R150 2/2 1k0
C156 33n
C159 100p
C155 33n
R150 1/2 1k0
C244 22p
C245 22p
XAUDIO(3) "MIC2P"
XAUDIO(4) "MICB2"
XAUDIO(5) "MIC2N"
XEAR(3:0)
1 "XEARP"
0 "XEARN"
L162 600R/100MHz
L163 600R/100MHz
C104 3n3
C105 3n3
Z155
Z154
C150 4u7
R201 1/2 22R
R201 2/2 22R
XAUDIO(1) "HF"
XAUDIO(2) "HFCM"
HEADINT
HOOKINT
Z152
R151 10k
C160 1n0
R152 22k
C161 1u0
GND
"Z154-Z157 HAVE CAPACITANCE AROUND 20pF"
XAUDIO(0) "HEADINT"
XAUDIO(6) "HOOKINT"
XAUDIO(17:0)

DAMPS RF - Baseband Interface

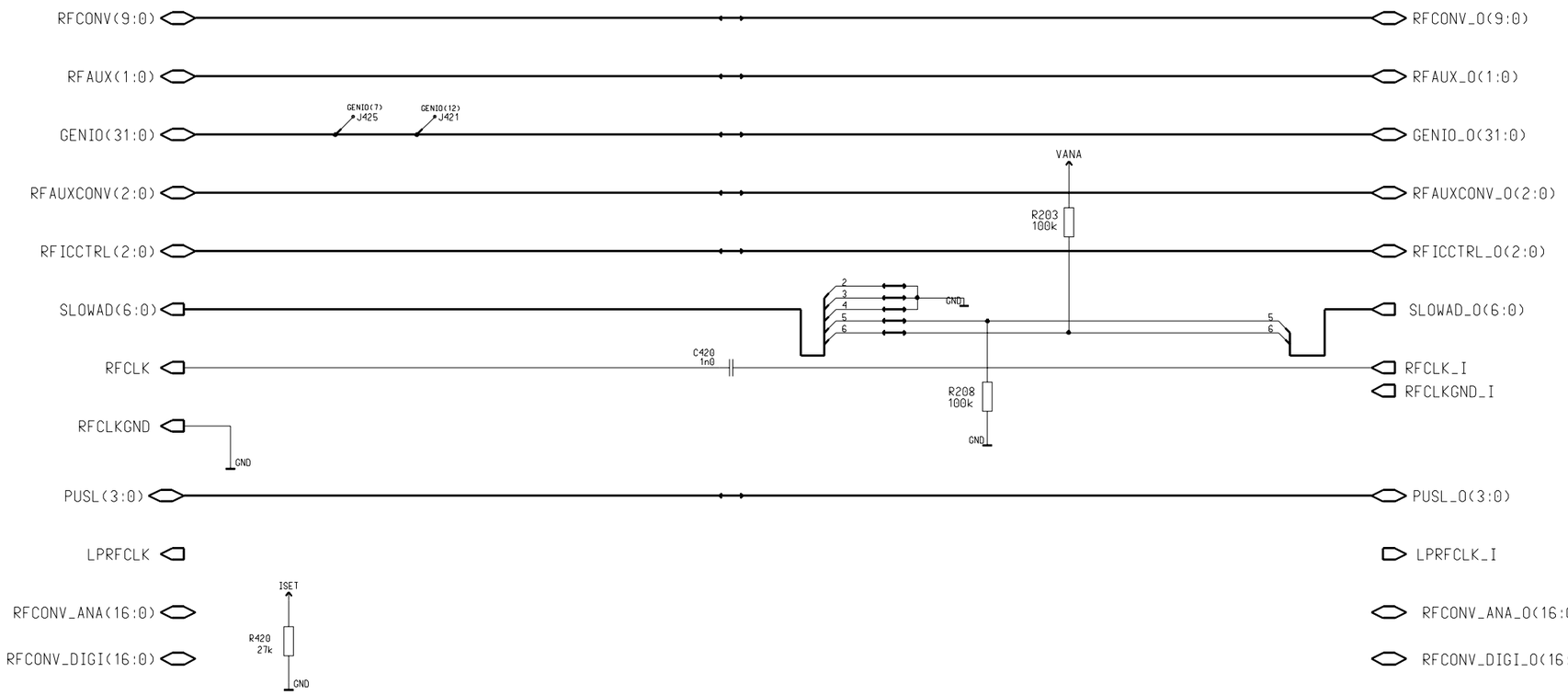

DCT4 Common BB - Discrete Power Management

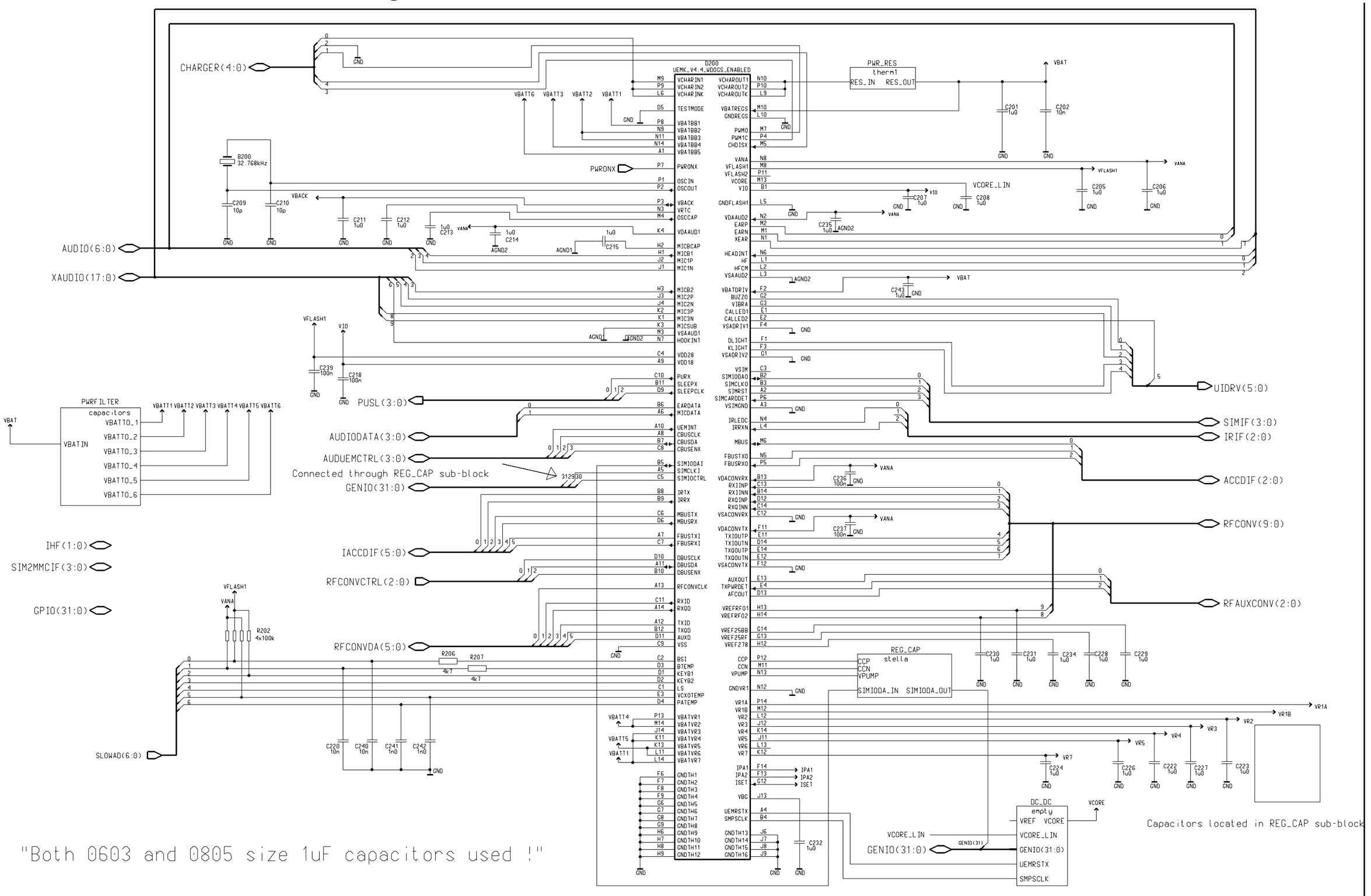

DCT4 UPP Implementation

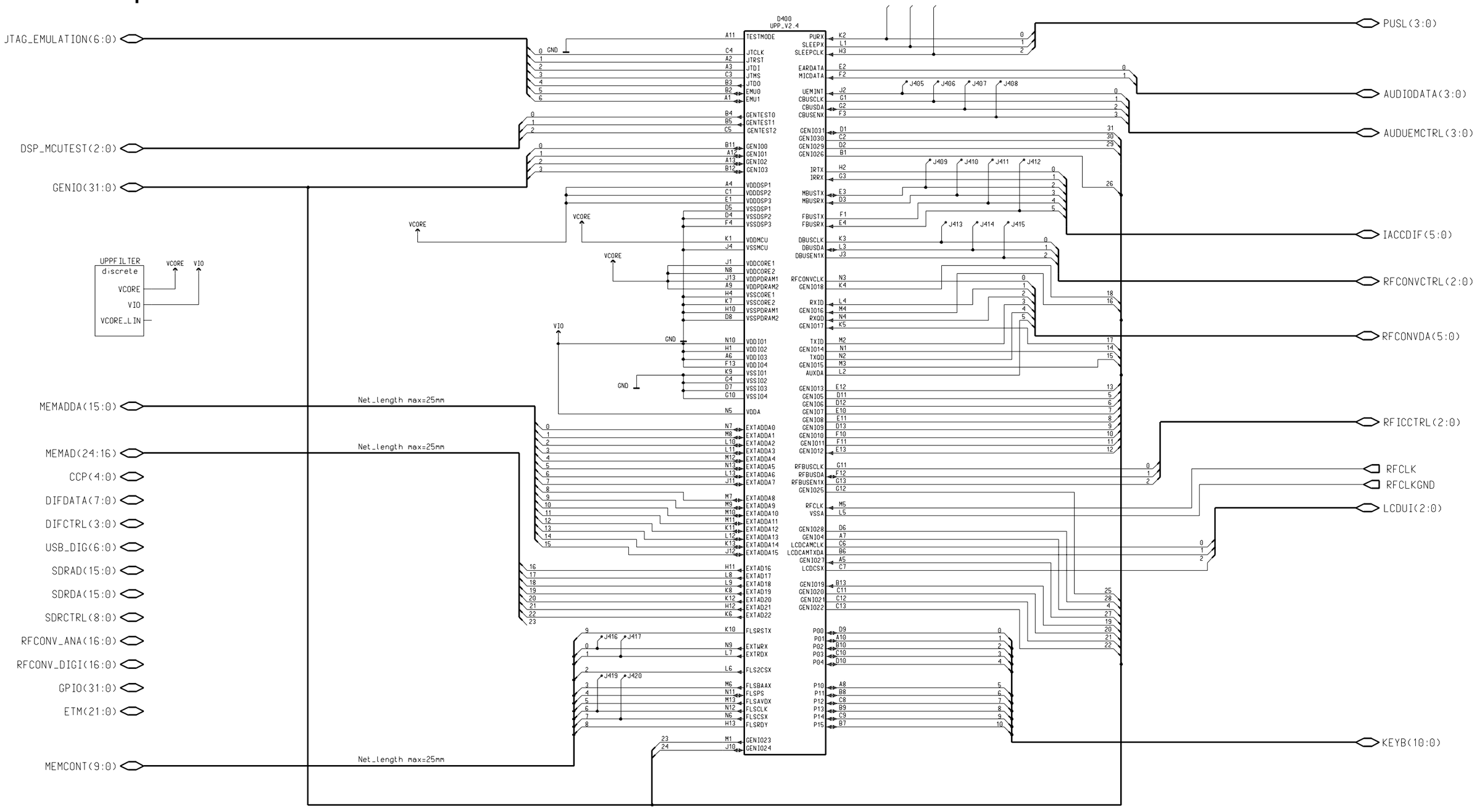

Sys - Key UI Diagram

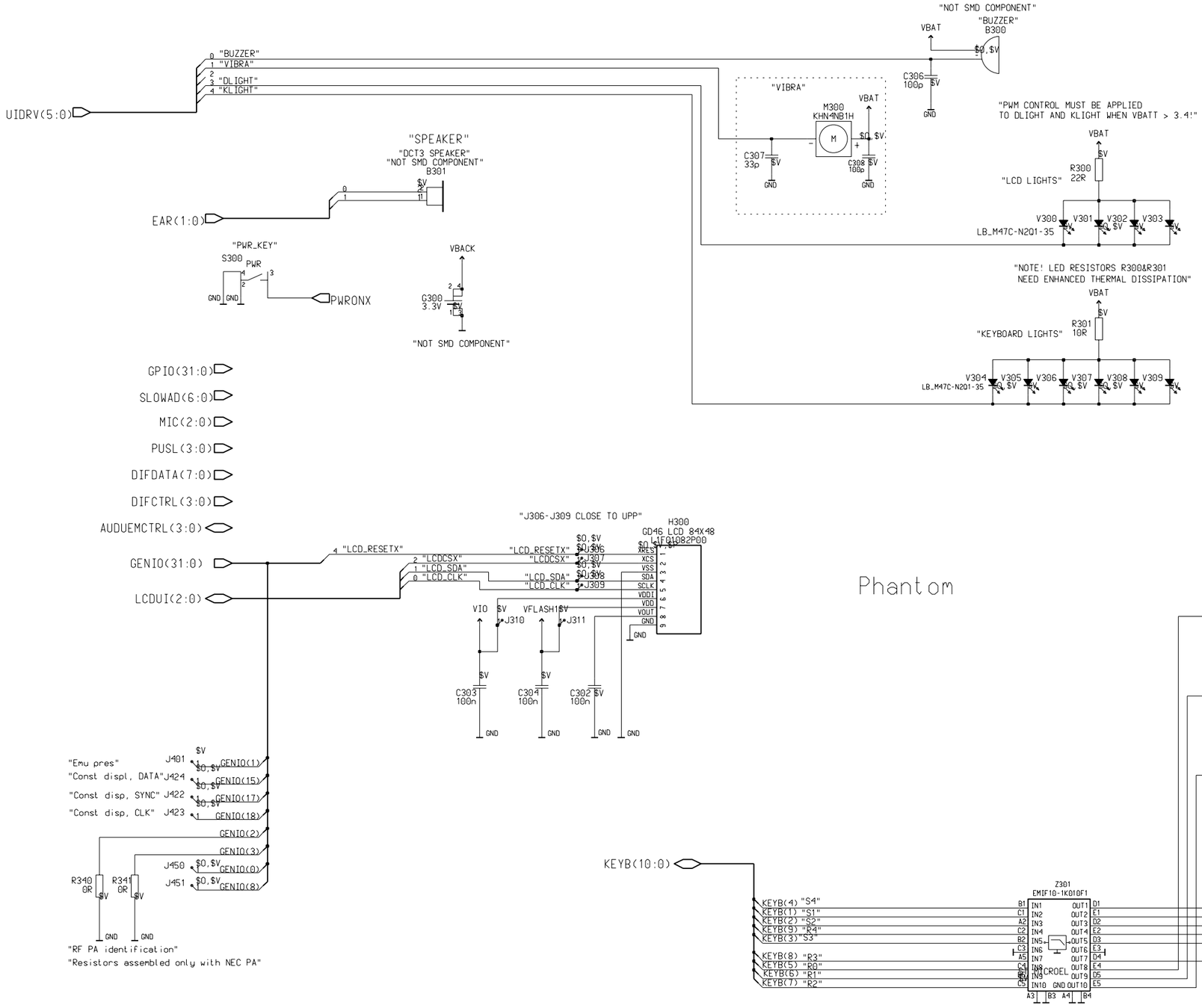

Assembly Values Diagram

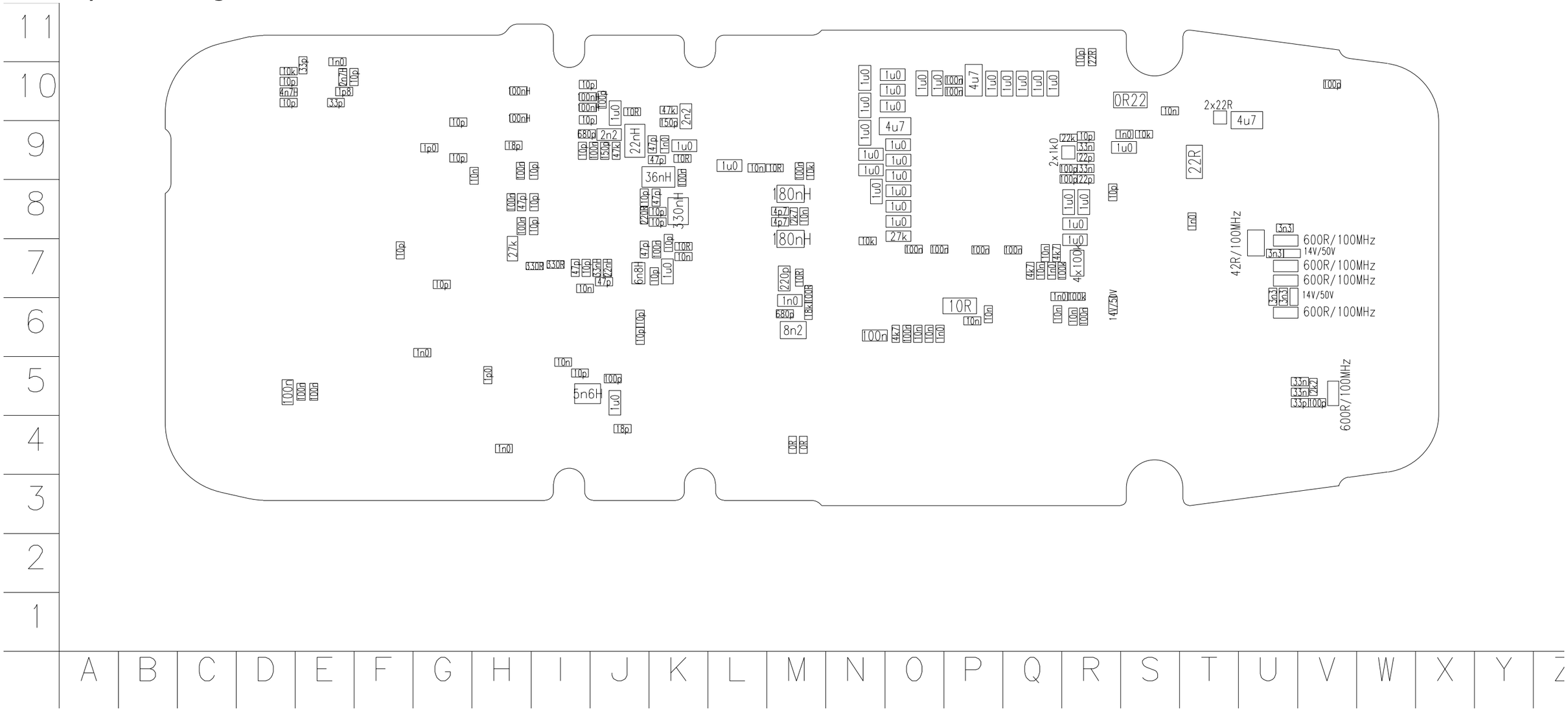

©Nokia Corporation Confidential

Layout Diagram - Top

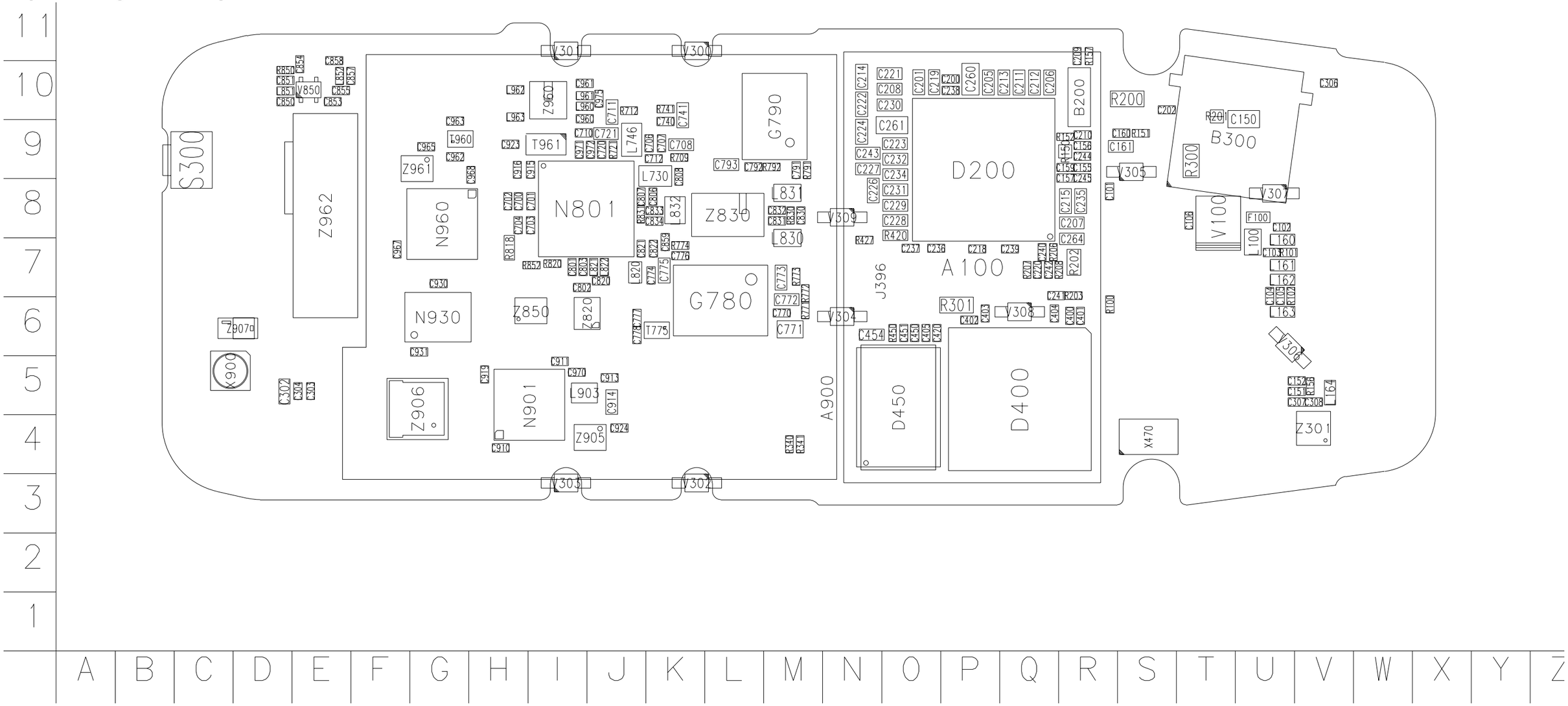

Layout Diagram - Bottom

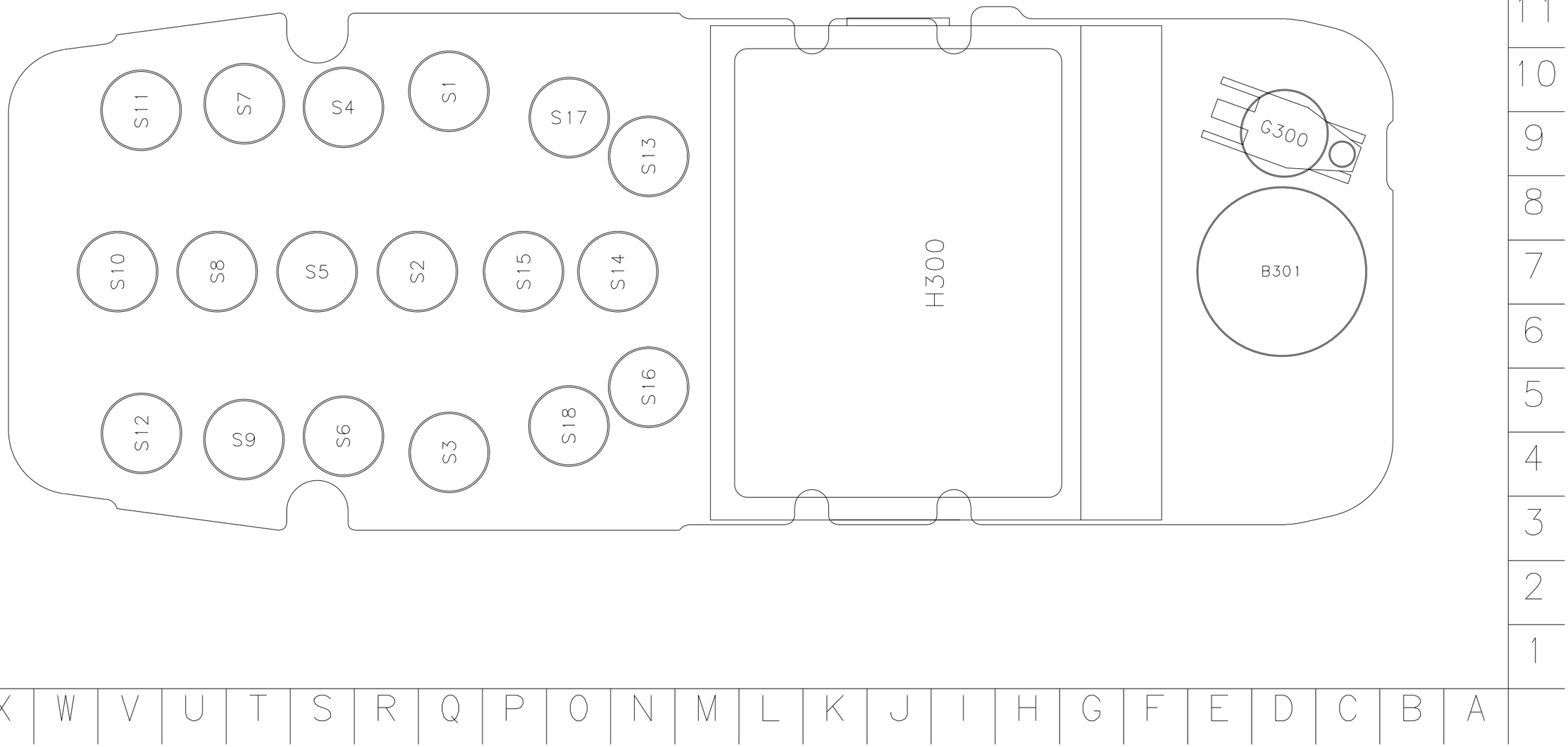

©Nokia Corporation Confidential